PoWer TIG Series

GeKaMac®

PoWer TIG 400 DC PULSE

Users Manual

Please Read and Understand This Manual
Before Operating The Welding Machine

www.gedikwelding.com

Dear Customer

Thank you for choosing our product! This instruction manual will help you get to know your new machine. Read the manual carefully and you will soon be familiar with all the many great features of your new product. Please also take special note of the safety rules in the manual and follow exactly the instructions.

If you treat your product carefully, this definitely helps to prolong its enduring quality and reliability. For more information, please contact us or consult authorized distributor.

The products in the manual may be changed without prior notice. The model you purchase is for:

☐ **POWER TIG 400 DC PULSE**

Please find corresponding models from the "Contents".

Important:

Please read carefully the safety rules given in the manual and follow exactly the instructions to avoid potential hazard and injury.

Safety Rules

“Danger” indicates an imminently hazardous situation which, if not avoided, will result in death or serious injury.

“Warning!” indicates a possible hazardous situation which, if not avoided, could result in death or serious injury. The possible hazards are explained in the text.

“Caution” indicates a possible hazardous situation which, if not avoided, may result in slight or moderate injury.

“Note!” indicates a situation which implies a risk of impaired welding result and damage to the equipment.

Utilization for intended purpose only

- The machine may only be used for jobs as defined by the “Intended purpose”.
- Utilization for any other purpose, or in any other manner, shall be deemed to be “not in

accordance with the intended purpose”. The manufacturer shall not be liable for any

damage resulting from such improper use.

Safety signs

- All the safety instructions and danger warnings on the machine must be kept in legible condition, not removed, not be covered, pasted or painted cover.

Safety inspection

- The owner/operator is obliged to perform safety inspection at regular intervals.
- The manufacturer also recommends every 3-6 months for regular maintenance of power sources.

Electric shock can kill

- Touching live electrical parts can cause fatal shocks or severe burns. The electrode and work circuit is electrically live whenever the output is on. The input power circuit and machine internal circuits are also live when power is on. In MIG/MAG welding, the wire, drive rollers, wire feed housing and all metal parts touching the welding wire are electrically live. Incorrectly installed or improperly grounded equipment is a hazard.
- Do not touch live electrical parts of the welding circuit, electrodes and wires with your bare skin or wet clothing.
- The operator must wear dry hole-free insulating welding gloves and body protection while performs the welding.
- Insulate yourself from work and ground using dry insulating protection

which is large enough to prevent you full area of physical contact with the work or ground.

- Connect the primary input cable according to rules. Disconnect input power or stop machine before installing or maintenance.
- If welding must be performed under electrically hazardous conditions as follow: in damp locations or wearing wet clothing; on metal structures such as floors, gratings, or scaffolds; when in cramped positions such as sitting, kneeling, or lying; or in occasion when there is a high risk of unavoidable or accidental contact with the work piece or ground. Must use additional safety precautions: semiautomatic DC constant voltage (wire) welder, DC manual (Stick) welder and AC welder with reduced open-load voltage.
- Maintain the electrode holder, ground clamp, welding cable and welding machine in good, safe operating condition. Replace damaged part immediately.

Electric and magnetic fields (EMF)may be dangerous

- If electromagnetic interference is found to be occurring, the operator is obliged to examine any possible electromagnetic problems that may occur on equipment as follow:

- minas, signal and data-transmission leads
- IT and telecoms equipment
- measurement and calibration devices
- Wearers of pacemakers

- Measures for minimizing or preventing EMC problems:

– Mains supply

If electromagnetic interference still occurs, despite the fact that the mains connection in accordance with the regulations, take additional measures

– Welding cables

Keep these as short as possible

Connect the work cable to the work piece as close as possible to the area being welded.

Lay tem well away from other cables.

Do not place your body between your electrode and work cables.

– Equipotential bonding
– Work piece grounding (earthing)
– Shielding

Shield the entire welding equipment and other equipment nearby.

ARC rays can burn.

- Visible and invisible rays can burn eyes and skin.
- Wear an approved welding helmet or suitable clothing made from durable flame-resistant material (leather, heavy cotton, or wool) to protect your eyes and skin from arc rays and sparks when welding or watching.

- Use protective screens or barriers to protect other nearby personnel with suitable, non-flammable screening and/or warn them not to watch the arc nor expose themselves to the arc rays or to hot spatter or material.

Fumes and gases can be dangerous

- Welding may produce fumes and gases, breathing these fumes and gases can be hazardous to your health.
- When welding, keep your head out of the fume. If inside, ventilate the area at the arc to keep fumes and gases away from the breathing zone. If ventilation is not good, wear an approved air-supplied respirator.
- Work in a confined space only if it is well ventilated, or while wearing an air-supplied respirator.
- Welding fumes and gases can displace air and lower the oxygen level causing injury or death. Always use enough ventilation, especially in confined areas, to insure breathing air is safe.

Welding and cutting sparks can cause fire or explosion.

- When not welding, make sure the electrode circuit is not touching the work or ground. Accidental contact can cause sparks, explosion, overheating, or fire. Make sure the area is safe before doing any welding.
- Welding and cutting on closed containers, such as tanks, drums, or containers, can cause them to blow up. Make sure proper steps have been taken.
- When pressure gas is used at the work site, special precautions are required to prevent hazardous situations.
- Connect work cable to the work as close to the welding zone as practical to prevent welding current from passing too long and creating fire hazards or overheat.
- Wear oil-free protective garments such as leather gloves, heavy shirt, cuffless trousers, high shoes, and a cap. Wear ear plugs when welding out of position or in confined places. Always wear safety glasses with side shields when in a welding area.
- Be attention that welding sparks and hot materials from welding can easily go through small cracks and openings to adjacent areas and start a fire. Remove fire hazardous from the welding area, if not possible, cover them thoroughly. Do not weld where flying sparks can strike flammable material and where the atmosphere may contain flammable dust, gas, or liquid vapors (such as gasoline).
- Protect yourself and others from flying sparks and hot metal. Remove any combustibles from operator before perform any welding.
- Keep a fire extinguisher readily available.

- Empty containers, tanks, drums, or pipes which have combustibles before perform welding.
- Remove stick electrode from electrode holder or cut off welding wire at contact tip when not in use.

Apply correct fuses or circuit breakers. Do not oversize or bypass them.

Cylinder can explode if damaged.

- Pressure gas cylinders contain gas under high pressure. If damaged, a cylinder can explode. Since gas cylinders are normally part of the welding process, be sure to treat them carefully.
- Cylinders should be located away from areas where they may be struck or subjected to physical damage. Use proper equipment, procedures, and sufficient number of persons to lift and move cylinders.
- Always install cylinders in an upright position by securing to a stationary support or cylinder rack to prevent falling over or tipping.
- Keep a safe distance from arc welding or cutting operations and any other source of heat, sparks, or flame.
- No touching cylinder by welding electrode, electrode holder or any other electrically “hot” parts. Do not drape welding cables or welding torches over a gas cylinder.
- Use only correct compressed gas cylinders, regulators, hoses, and fittings designed for the process used; maintain them and associated parts in good condition.
- Use only compressed gas cylinders containing the correct shielding gas for the and properly operating regulators designed for the gas and pressure used. All hoses, fittings, etc. should be suitable for the application and maintained in good condition.
- Open the cylinder valve slowly and keep your head and face away from the cylinder valve outlet.

Valve protection caps should be kept in place over valve expect when the cylinder is in use or connected for use.

Hot parts can burn

- Do not touch hot parts with bare hand or skin.
- Ensure equipment is cooled down before perform any work.
- If touching hot parts is needed, use proper tools and/or wear heavy, insulated welding gloves and clothing to prevent burns.

Flying metal or dirt can injure eyes

- When welding, chipping, wire brushing, and grinding can cause sparks and flying metal. It can hurt your eyes.
- Remember wear appropriate safety glasses with side shields when in welding zone, even under your welding helmet.

Noise can damage hearing

- Noise from some processes or equipment can damage hearing.

Remember wear approved ear protection to protect ears if noise level is high.

Moving parts can injure

- Stay away from moving parts such as fans.
- Stay away from pinch points such as drive rolls.
- Keep all doors, panels, covers, and guards closed and securely in place.
- Have only qualified persons remove doors, panels, covers, or guards for servicing and maintenance.
- Reinstall doors, panels, covers, or guards when servicing and maintenance is finished and before reconnecting input power.

Overuse can cause overheating

- Use machine follow duty cycle. Reduce current or reduce duty cycle before starting to weld again.
- Allow cooling period.

Do not block or filter airflow to unit.

Safety markings

Equipment with CE-markings fulfils the basic requirements of the Low-Voltage and Electromagnetic Compatibility Guideline (e.g. relevant product standards according to EN 60974).

Safety markings

Equipment with CCC markings meets the requirements of implementations rules for China compulsory certification（e.g. relevant product standards according to GB/T 15579）.

Safety markings

CSA marked equipment meets the requirements of the North American market safety certification implementation rules (e.g. relevant product standards according to CAN/CSA-E60974,ANSI/IEC 60974)

Contents

1-GENERAL REMARKS 8
1-1 Power source features 8
1-2 Functional principle 8
1-3 Output characteristics 9
1-4 Duty cycle 9
1-5 Applications 10
1-6 Warning label 10
2-VERSIONS BRIEFS 10
3-BEFORE COMMISSIONING 11
3-1 Utilization for intended purpose only 11
3-2 Machine installation rules 11
3-3 Power source connection 11
3-4 Welding cables instruction 12
4-POWER TIG 400 DC PULSE 13
4-1 System components 13
4-2 Basic equipments for welding 13
4-3 Control panel 14
4-4 Submenu 17
4-5 Other function 19
4-6 Interface 20
4-7 Installation 23
4-8 Technical data 27
4-9 Dimension 28
4-10 Disassembly and reassembly 29
5-REMOTE CONTROLLER 32
5-1 Analog remote controller 32
5-2 Digtal remote controller 33
6-TROUBLE SHOOTING 35
7-CARE AND MAINTENANCE 36

1-GENERAL REMARKS

1-1 Power source features

This series pulse TIG welding machine can perform DC TIG, Pulse TIG, and SMAW processes. This series welding machines enjoy reasonable static characteristic and sound dynamic characteristic.

Features and benefits:

-MCU controlled technology

-Self-diagnostic function with error code display

-Precise pulse control, good welding performance

-Pre-gas, post-gas, up-slope time, down-slope time, adjustable parameters, easy to control

-Pulse frequency, pulse ratio, pulse width can be adjusted to improve the welding performance

-Soft switch technology, high efficiency, high power factor.

1-2 Functional principle

This series welding machines apply IGBT HF inverter technology. 3- phase input volt is rectified, then transformed into HF AC by the inverter which includes IGBT, etc., reduced by HF transformer, rectified and filtered by HF rectifier, then output. After this process, the welding machine dynamic response ability has been greatly improved, size and weight of transformer and reactor are reduced noticeably, and whole machine efficiency has been improved.

The design of control circuit makes the welding machine enjoy strong ability against power grid fluctuation and perfect welding performance. Welding machine has the following features: easy arc-starting, stable arc, good welding seam formation and capability of continuous welding current regulation. The schematic diagram is as shown in Fig. 1-2-1:

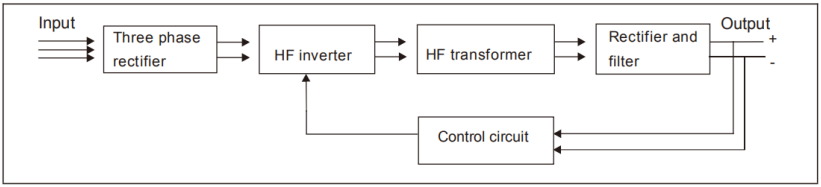

Fig. 1-2-1: Schematic diagram

1-3 Output characteristics

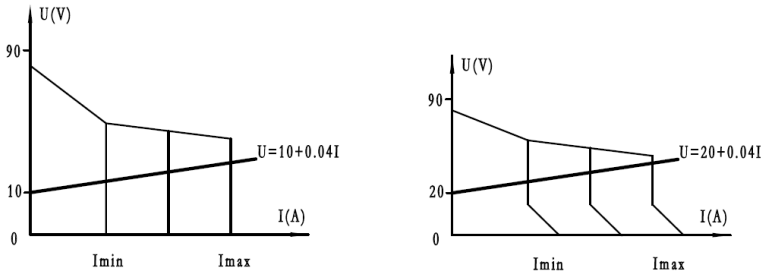

Fig. 1-3-1: Output characteristics

1-4 Duty cycle

Duty cycle is percentage of 10 minutes that a machine can weld at rated load without overheating. If overheats, thermostat(s) will open, output stops. Wait for fifteen minutes for the machine to cool down. Reduce amperage or duty cycle before welding.

Note! Exceeding duty cycle can damage the machine and greatly reduce its lifespan.

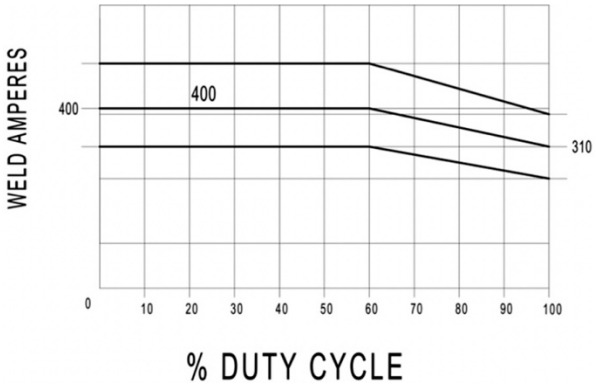

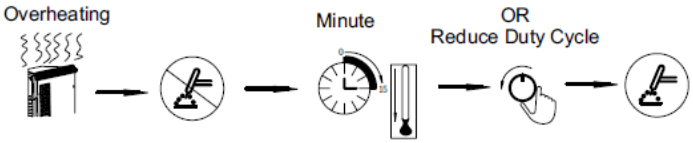

Fig. 1-4-1: Duty cycle

1-5 Applications

The power source is suitable for mild steel, alloy steel, stainless steel, copper, silver and titanium welding, and is designed for the following recommended areas:

Electric power, petrochemical construction

Boiler and pressure vessel

Shipyards

Bicycle, fitness equipment, and stainless furniture manufacturing

Nuclear power station

1-6 Warning label

The warning label is affixed on the top of machine.

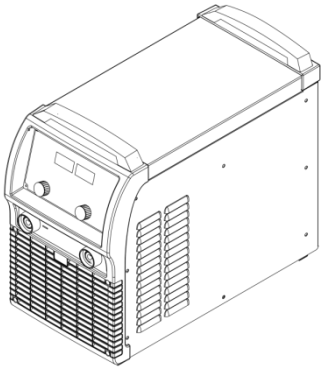

Fig. 1-6-1: Warning label

2-VERSIONS BRIEFS

The POWER TIG 400 DC PULSE welding machine system consists of welding power, hot wire power, water cooler, wire feeder and welding torch, it is integrated structure of welding power, hot wire power and water cooler among them.

● POWER TIG 400 DC PULSE

Digital control panel. Accurate preset and adjustable parameters. Suitable for thin plate pulse mode welding. The rated welding current degree is 400A for this series.

● POWER TIG 400 DC PULSE

Digital control panel. Accurate preset and adjustable parameters. Suitable for thin plate pulse mode welding. The rated welding current degree is 400A for this series. This series can use with remote controller(Analog and digital model).

3-BEFORE COMMISSIONING

Warning! Operating the equipment incorrectly can cause serious injury and damage. Do not use the functions described here until you have read and completely understood “safety rules”.

3-1 Utilization for intended purpose only

The power source may only be used for SMAW ,TIG. Utilization for other purposes, or in any other manner, shall be deemed to be "not in accordance with the intended purpose". The manufacturer shall not be liable for any damage resulting from such improper use. Operate, inspect and maintain should follow all the instructions given in this manual.

3-2 Machine installation rules

According to test, protection degree of this power source is IP23S. However, the internal key components must be protected from direct soaking.

Warning! A machine that topples over or falls from its stand can cause injury.
Place equipment on an even, firm floor in such a way that it stands firmly.
The venting duct is very important for safety protections. When choosing the machine location, make sure it is possible for the cooling air to freely enter and exit through the louvers on the front and back of machine. Any electro conductive metallic dust like drillings must not be allowed to get sucked into the machine.

3-3 Power source connection

- The power source is designed to run on the voltage given on the nameplate.
- The mains cables and plugs must be mounted in accordance with the relevant technical standards.
- The power supply sockets that come with power source are designed to use strictly according to the marked voltages.

Note! Inadequately dimensioned electrical installations can lead to serious damage. The mains lead, and its fuse protection, must be dimensioned in accordance with the local power supply. The technical data shown on the nameplate shall apply.

3-4 Welding cables instruction

When welding, please pay attention to the followings:

a. The welding cables should be kept as short as possible;

b. If extended cable is used, please do as shown in Fig. 3-4-1.

Wrong Coil the excess ground cable and welding cable in same direction respectively.	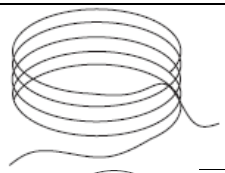
Correct Straighten the ground cable and welding cable and make them close to each other. Bundle the ground cable and welding cable together, running the wires close to the ground.	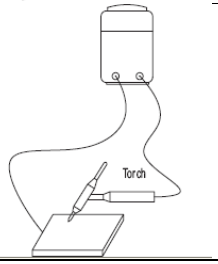
Correct When the excess cables are only be used by rolling up, coil the cables to two windings in reverse direction and overlap them. The number of turns for A is same as the number for B. Handle the welding cable and ground cable according to above-mentioned method.	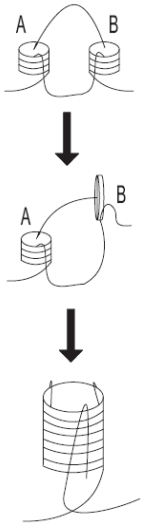

Fig. 3-4-1: Welding cables instruction

4- POWER TIG 400 DC PULSE

4-1 System components

POWER TIG 400 DC PULSE welding machine can be equipped with many different accessories and can be used in different special sites with different configurations.

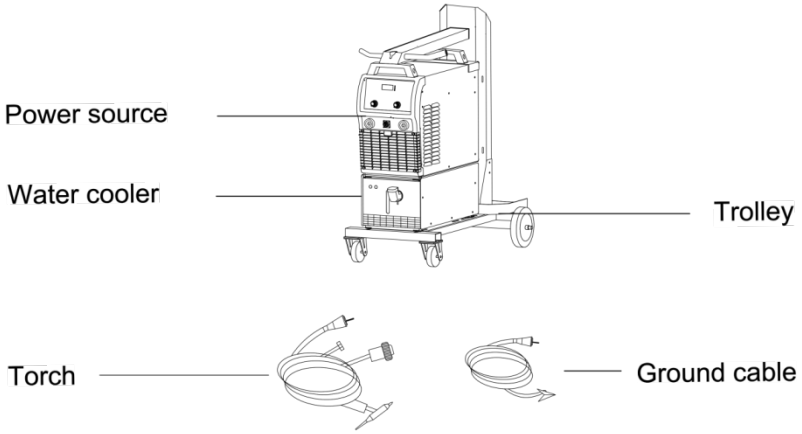

Fig. 4-1-1: System components

4-2 Basic equipments for welding

Only be equipped with the necessary accessories, can the power source POWER TIG 400 DC PULSE operate well. The following is the needed accessories list.

TIG welding

-Power source

-Water cooling machine

-Ground cable

-TIG welding torch

-Gas regulator, gas hose, gas cylinder (to supply the machine with shielding gas)

-Welding wire

STICK welding

-Power source

-Ground cable

-Electrode holder

-Electrode

4-3 Control panel

Note! You may find that your machine has certain functions or some parameters that are not described in this operating manual. Also, certain illustrations may be very slightly different from the actual controls on your machine. However, these controls function in exactly the same way.

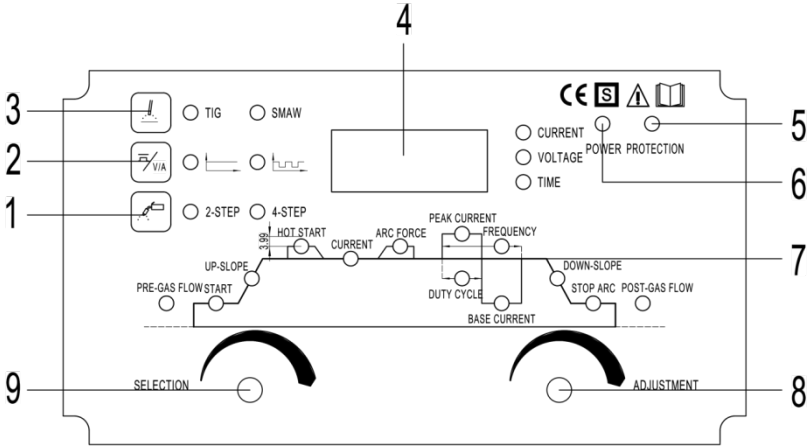

Fig. 4-3-1: Control panel

1.2-STEP/4-STEP button

press this button to switch between 2-step and 4-step operation mode, the indicator will light up accordingly. Torch operation mode:

Legend:

Fig. 4-3-2: Press trigger 2-STEP operation mode

Fig. 4-3-3: Hold trigger

Fig. 4-3-4: Release trigger

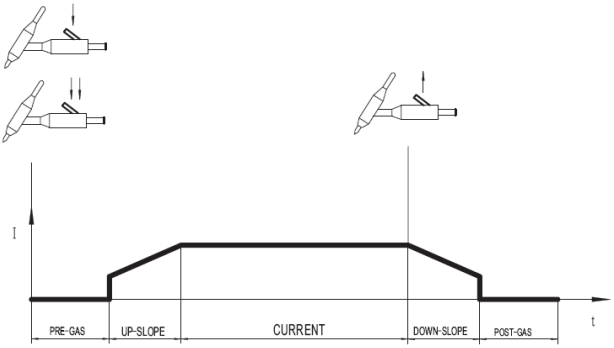

Fig. 4-3-5: 2-step operation mode

4-STEP operation mode

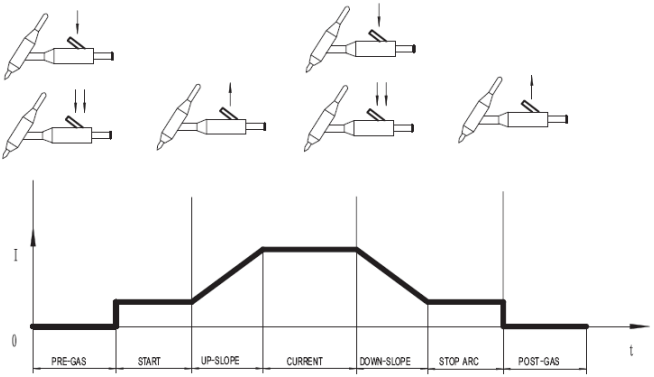

Fig. 4-3-6: 4-step operation mode

Repeat mode(only POWER TIG 400 DC PULSE welding machine has this function, please refer to the submenu)

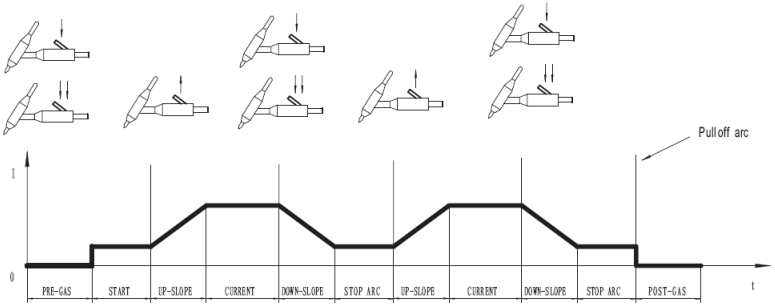

Fig. 4-3-7: Repeat mode

Spot weld mode(only POWER TIG 400 DC PULSE welding machine has this function, please refer to the submenu)

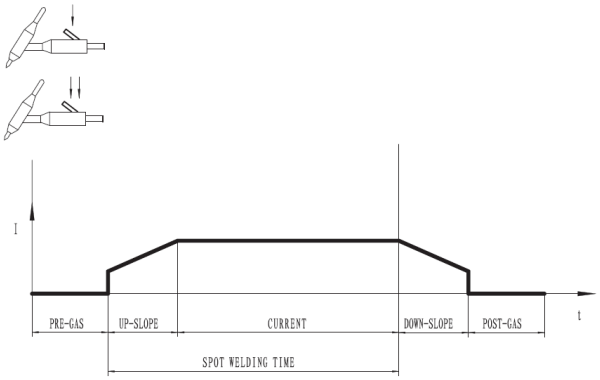

Fig. 4-3-8: Spot weld mode

2.CC/PULSE button

on “TIG”: switch between “Constant” DC TIG and “Pulse” DC TIG; On “SMAW”: switch between “Amp” Display and “Volt” Display, the indicator will light up accordingly.

3.TIG/SMAW button

press this button to switch between TIG and SMAW, the indicator will light up accordingly.

4.Displayer

When the welding power supply is working properly, it displays the welding current and the value of each parameter. When the welding power supply is abnormal, the corresponding fault code will be displayed and shut down automatically.

5.Power indicator

lights up if power source is effectively connected to power supply.

6.Protection indicator

The indicator is yellow; it doesn’t light on when working normally. Welding machine stops welding automatically while in overheat or water insufficient, and the indicator is on.

7.Welding parameters:

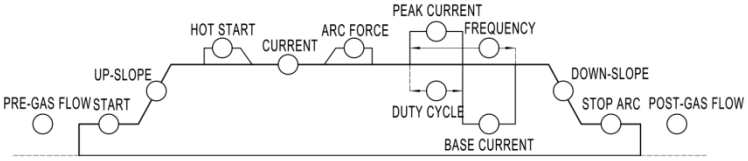

Fig. 4-3-9:Welding power source parameter

Parameters	Description	Unit	Setting range	Factory setting
PRE-GAS FLOW	Time of gas flow before welding	Sec	0.1~9.99	0.05
START	The initial current after the arc is started	A	5~315/400/500	50
UP-SLOPE	Time of starting current is increased until it reaches welding current	Sec	0.1~10	0.5
HOT START	Current of starting arc on SMAW mode	A	10-200	50
CURRENT	Welding current while in the SMAW and DC TIG mode	A	4~320/410/510	100
ARC FORCE	Current of arc- force on SMAW mode	A	5-200	50
PEAK CURRENT	Welding current while in the DC Pulse TIG mode	A	4~320/410/510	100
DUTY CYCLE	The time proportion of peak current in single cycle under pulse mode	%	15-85	35
FREQUENCY	The frequency of welding current in pulse mode	Hz	0.2~20	4.0
BASE CURRENT	The arc maintenance current in pulse mode	A	4~320/410/510	50
DOWN-SLOPE	Time of welding current is continuously lowered until it reaches final current	Sec	0.1~15	0.1
STOP ARC	The current before arc blowout	A	5~315/400/500	50
POST-GAS FLOW	Time of gas flow after arc blowout	Sec	0.1~60	15.0

Table. 4-3-1: Parameter list

8.ADJUSTMENT knob

It is used for adjusting the parameters that are described in7. When a parameter is selected by SELECTION knob, rotate this knob clockwise to increase the selected parameter; rotate this knob anticlockwise to decrease the selected parameter. Press this button and turn to left or right for quick adjustment;

9.SELECTION knob

It is used for selecting the parameters that are described in 7. Rotate clockwise to select parameter from left to right; rotate anticlockwise to select parameter from right to left.

Important! Thanks to the microprocessor control, the following functions can be realized:

All parameters that have been set can be automatically stored and will retain until the next time they are changed. This is true even if the power source is switched off and on again in the meantime.

4-4 Submenu

4-4-1 Submenu parameter

POWER TIG 400 DC PULSE have different submenus, POWER TIG 400 DC PULSE has more functions.

Power Tig 400DC Pulse Parameter	Code	Description	Factory Setting
Gas test function (First selection TIG mode)	P50/P51	P50 - no gas test function, P51- gas test function	P50
Tungsten diameter selection	P0.8-6.0	Tungsten diameter range P0.8-P6.0	P2.0

Table. 4-4-1: Power Tig 400DC Pulse Submenu parameters list

Power Tig 400DC Pulse Parameter	Code	Description	Factory Setting
Remote/Local control	F00/F01/ F02/F03	F00-Local control,F01-Analog remote Control, F02-Digital remote control,F03- Group Control	F00
Reserve	F10/F11	F10/F11	F10
Trigger operation mode	FF0/FF1/ FF2/FF3	FF0-2 STEP;FF1-4 STEP; FF2-Repeat welding;FF3-Spot welding	FF0
Arc ignition function	FHy/FHn	FHy-HF,FHn-No HF	FHy
Pulse frequency selection	F-L/F-H	F-L: Pulse frequency range: 0.2-20Hz; F-H:Pulse frequency range: 20-500Hz;	F-L
Gas test function	F50/F51	F50 - no gas test function, F51- gas test function	F50
Tungsten diameter selection	P0.8-6.0	Tungsten diameter range P0.8-P6.0	P2.0
Spot welding time setting	H0.5-H5.0	Spot welding time range H0.5-H5.0	H2.0
SLOW/FAST operation	FSL/FSA	FSL:all parameter can adjsut;(SLOW) FSA:only current can adjust.(FAST)	FSL

Table. 4-4-2: POWER TIG 400 DC PULSE Submenu parameters list

4-4-2 Enter and exit submenu

Press and hold the selection knob and TIG/SMAW selection button at same time for 5 seconds to enter the submenu interface, Adjust the parameter selection knob to select the parameter, adjust the parameter adjustment knob to set the value of the parameter.

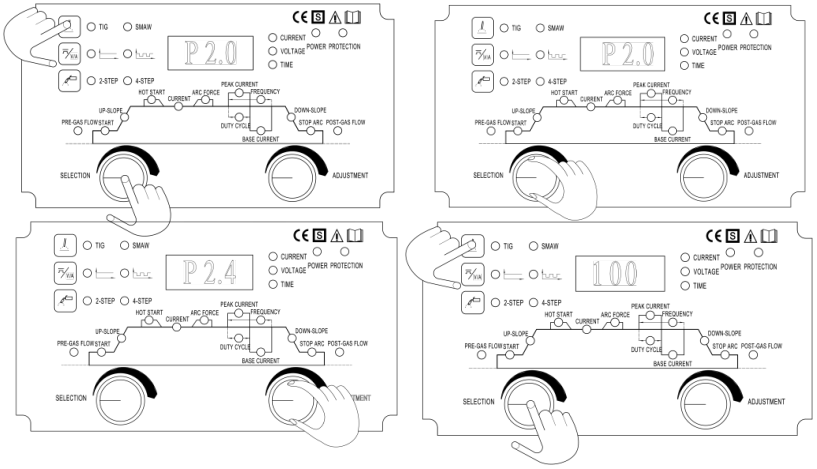

Fig. 4-4-1: Submenu operation

Press and hold the selection knob and TIG/SMAW selection button at same time for 5 seconds to exit the submenu interface.

4-5 Other function

4-5-1 Switch between gas cooling/water cooling mode

When using water-cooling torch, press and hold the selection knob and adjustment knob at same time for 3 seconds, the machine will display "E0A" code and set to water-cooling state. Start the water-cooling unit and the "E0A" code will disappear automatically as soon as the water-cooling unit operates properly (Fig. 4-5-1).

When using gas-cooled torch, press and hold the selection knob and adjustment knob at same time for 3 seconds, the " E0A" code disappears and the machine is set to gas-cooling state. When using gas-cooled torch, welding machine does not show water shortage protection. (Fig. 4-5-1).

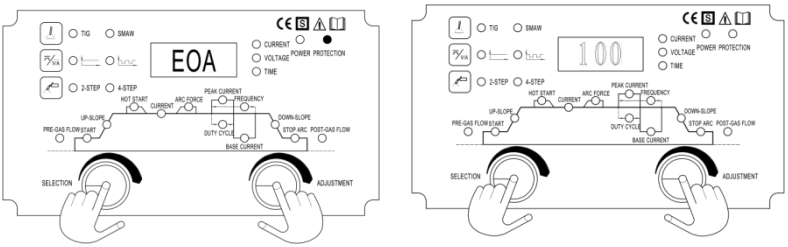

Fig. 4-5-1: Switch between gas cooling/water cooling

4-5-2 Gas test function

In TIG mode, press the ‘parameter adjustment knob’ and ‘TIG/SMAW’ buttons at the same time for 5 seconds, the panel displays "GRS", perform the same operation to exit the gas test function.

.

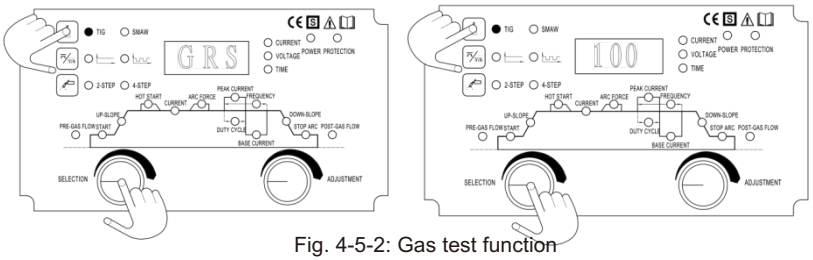

Fig. 4-5-2: Gas test function

4-5-3 Reset to factory setting

Press and hold the selection knob and 2/4 step button at same time for 5 seconds to reset to factory setting (Fig. 4-5-3).

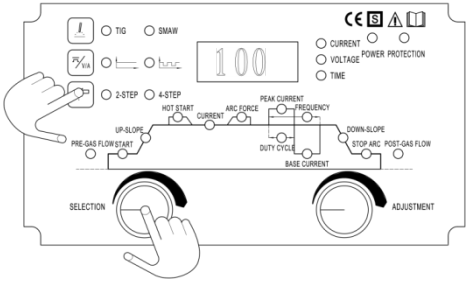

Fig. 4-5-3: Reset to factory setting

4-6 Interface

Note! You may find that your machine has certain functions or some parameters that are not described in this operating manual. Also, certain illustrations may be very slightly different from the actual controls on your machine. However, these controls function in exactly the same way.

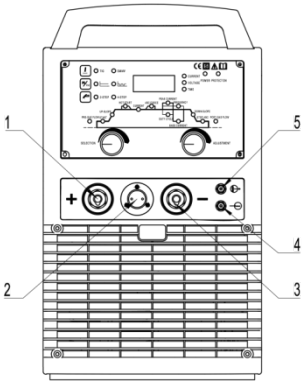

Fig. 4-6-1: Front panel

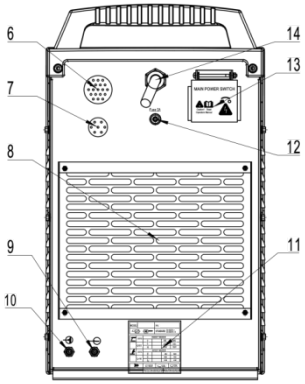

Fig. 4-6-2: Rear panel

1.Output terminal (+)

Connect electrode holder when in SMAW mode; Connect with the work piece when in TIG mode.

2.Control socket

Connect to torch trigger.

3.Output terminal (-)

Connect work piece when processing SMAW; connect with TIG torch when processing TIG welding.

4.Water inlet

Connect water hose of TIG torch.(optional).

5.Gas outlet

Connect gas hose of TIG torch.

6.Analog control socket(optional, only POWER TIG 400 DC PULSE welding machine has this socket)

Connect to analog remote controller or other special device.

Pin No.	Description
1	Chassis Ground , connect with shield layer of control cable.
2	Null
3	Power supply of remote control current given potentiometer:10VDC
4	Remote control current input signal (0-10VDC).
5	Remote control current GND.
6	Welding machine start signal, short circuit with pin 8 ,welding machine start

7	Gas test signal, short circuit with pin 8,the gas valve on.
8	Gnd.
9	Arc voltage output,0-10VDC(10V equals to 100V arc voltage).
10	Welding current output signal,0-10VDC(10V equals to Max. rated output current).
11	Gnd
12	Successful arc start signal: Standby: pin 12 and pin 13 open, successful arc start: pin12and pin13 short circuit
13	

Table 4-6-1 Description of analog control socket

7.Digtal remote control socket(optional, only POWER TIG 400 DC PULSE welding machine has this socket)

Connect to digital remote controller or other 485 communication device.

Pin No.	Pin No.	Description
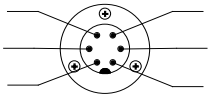	1	38VAC
	2	38VAC
	3	A
	4	B
	5	Y
	6	Z

Table 4-6-2 Description of digital remote control socket

8.Fan

Cooling down the heating components in the welding machine.

9. Water outlet

10 Gas inlet (part of solenoid valve)

Connect with Argon gas regulator with gas hose.

11.Nameplate

12.Fuse

13.Circuit breaker

The function of circuit breaker is to protect welding machine and operator by automatic trip to turn-off power supply when overload or short circuit happens to the power source. Normally, the switch flipped to upward means power-on. To start or stop the welding machine is done by the mains switch in the distribution box. Please do not take this circuit breaker as the power switch.

14.Power cord

It is 4-pin cable. The mixed-colored wire must be firmly grounded, the rest wires are connected with corresponding 3-phase power supply.

4-7 Installation

● **Installation environment requirements**

1. It should be placed indoors without direct sunlight, rainproof, low humidity and less dust. The ambient air temperature range is -10℃~+40℃.
2. The inclination to the ground should not exceed 10°.
3. There should be no wind in the welding station, if any, it should be covered.
4. The welding machine is more than 20cm away from the wall, and the distance between the welding machine is more than 10cm.
5. When using water-cooled welding torch, pay attention to anti-freezing.

● **power supply and cable requirement**

Please note the size of fuse and circuit breaker in the table below are for reference only.

Model		400
Power supply		AC380/400/415V±10%,
Electricity grid min. power (KVA)	Power grid	23
	Generator	43
Input protection(A)	Fuse	50
	Circuit breaker	63
Cable size (mm²)	power cord	≥4
	Output cable	50
	Protective GND wire	≥4

Table 4-7-1: Power supply and cable requirement

Note! Welding machine must be taken special design if it is powered by generator, please contact with manufacturer if you have such needs.

connections of power cord and distribution box

Warning! -Avoid hot-line work

- Operating by professional electrician
- Avoid connecting two power sources to one breaker
- Please refer to Table 6-1 to check if standard of input voltage, breaker and input cable is suitable

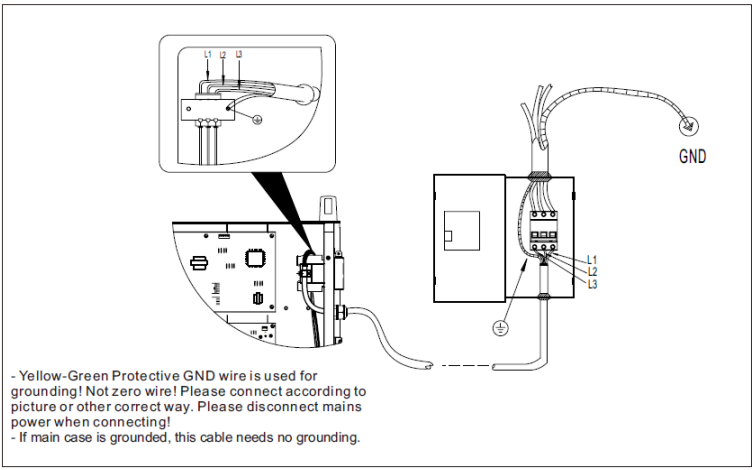

Fig.4-7-1: Connections of power cord and distribution box

●Gas cylinder installation

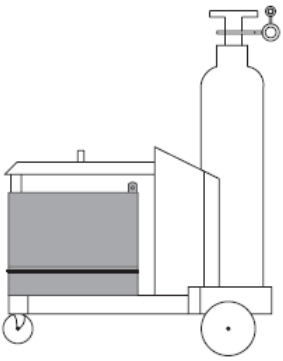

Fig. 4-7-2: Gas cylinder installation

1.Stand the gas cylinder on the trolley and secure it by fixing the cylinder strap around a point in the top third of the cylinder-but never around the neck of the cylinder.

2.Take the protective cap off the gas cylinder.

3.Gently turn the gas-cylinder value anticlockwise, and blow off any dust and dirt.

4.Screw the pressure regulator onto the gas cylinder and tighten it.

5.Connect the shielding-gas connector to the pressure regulator.

●TIG welding(gas cooling)

Warning! Operating the machine incorrectly can cause serious injury and damage. Do not use the machine until you have read the following

Safety rules

Before putting the machine into service

Warning! If the machine is plugged into the mains supply and the mains switch is in "O" position during preparation, there is a high risk of very serious injury and damage. Only carry out preparation when the machine is unplugged from the mains and the mains switch is off.

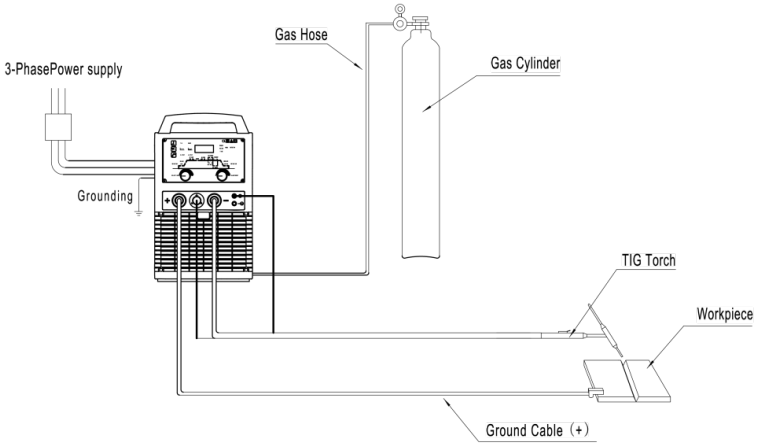

Fig.4-7-3: Gas-cooling TIG welding

●TIG welding(water cooling)

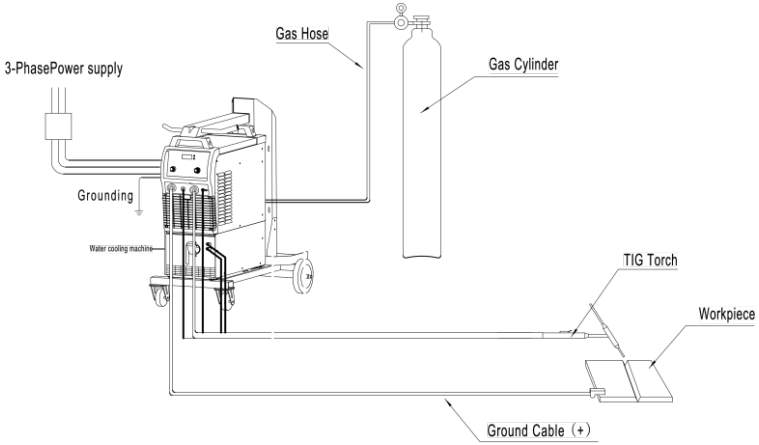

Fig. 4-7-4:Water-cooling TIG welding (Combined one machine)

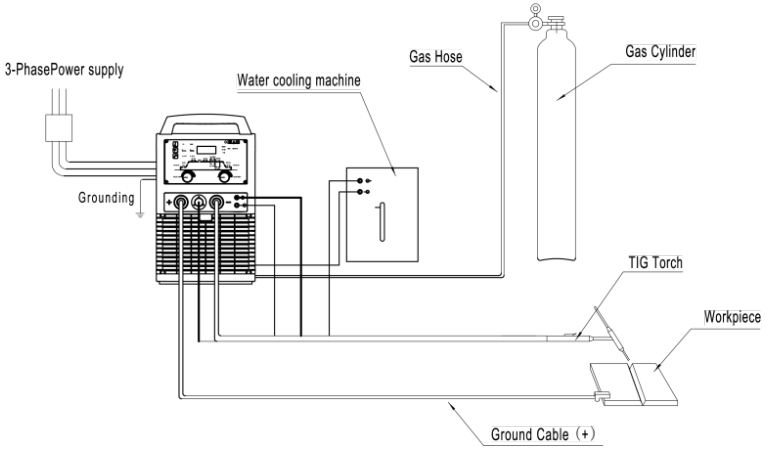

Fig. 4-7-5: Water-cooling TIG welding(Separate water cooling machine)

●SMAW welding

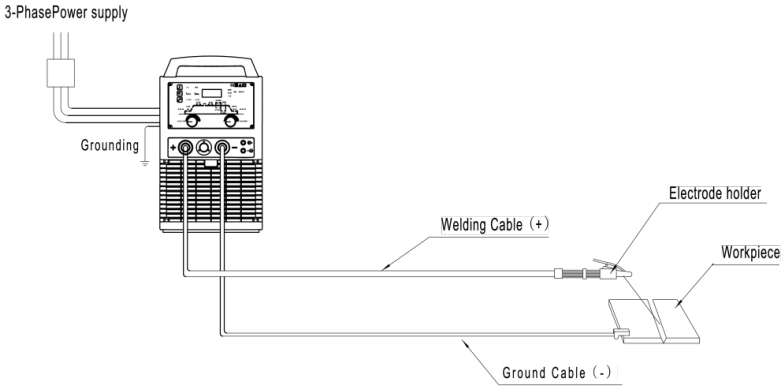

Fig.4-7-6:SMAW welding

4-8 Technical data

Note! For machines designed for special voltages, below is the technical data on the name plate.

Model	400
Rated input capacity (KW)	18
OCV (V)	76
Weight (Kg)	40
Electrode diameter(mm)	2～6
Duty Cycle (%)	60
Insulation class	H
Output current adjustment range (A)	4～400
Tungsten diameter(mm)	1～6
Rated input current (A)	28/26.6/25.6
Dimension (cm)	67x33x58
Input voltage/frequency	AC380V/400/415V

Table 4-8-1 Technical data

4-9 Dimension

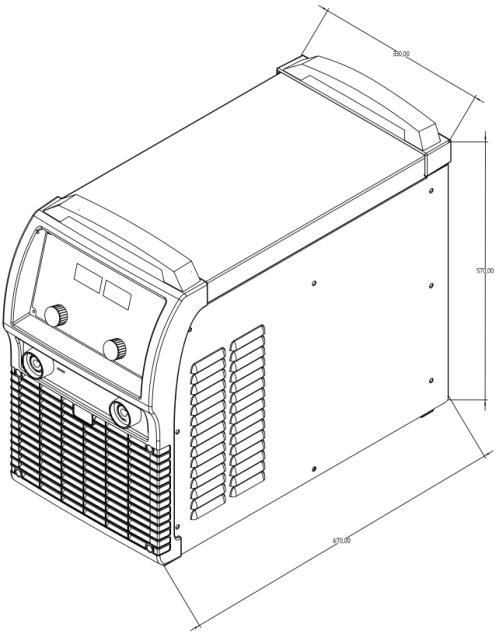

Fig. 4-9-1: Dimension

NO.	Item	Unit(mm)	Unit(inches)
1	length	670	26.4
2	Width	330	13
3	Height	572	22.5

Table. 4-9-1: Dimension

4-10 Disassembly and reassembly

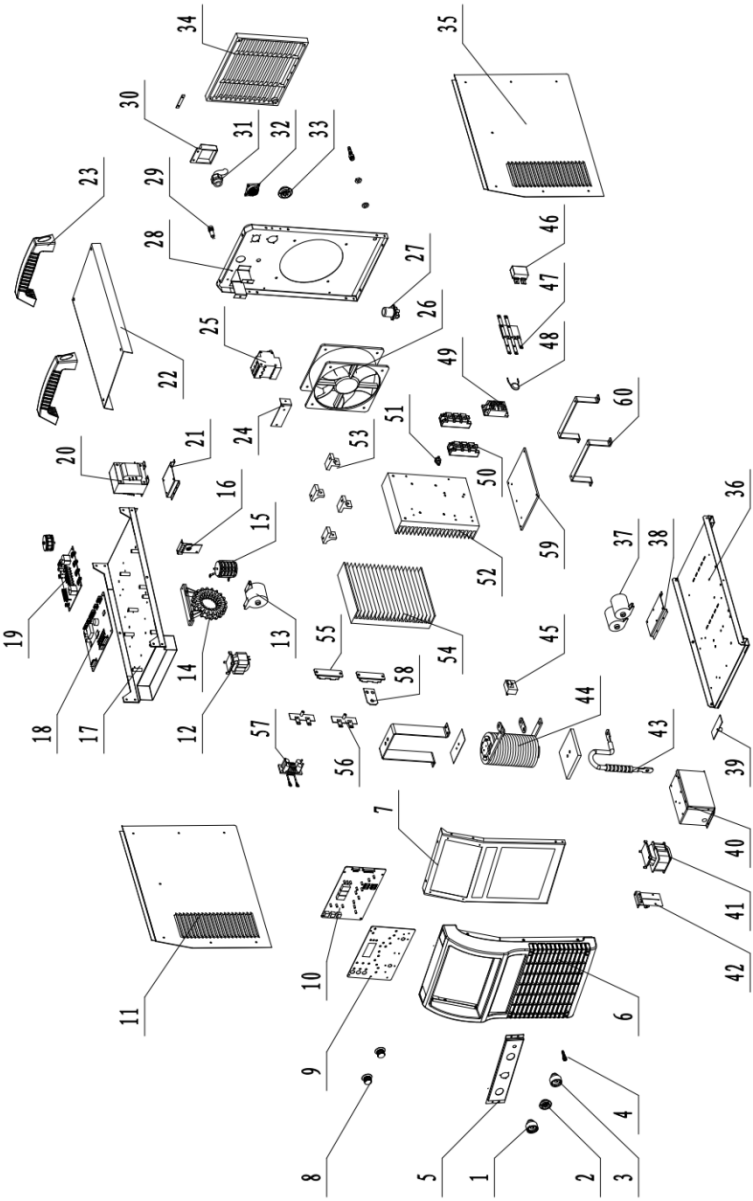

Fig.4-10-1: POWER TIG 400 DC PULSE

No.	Item	Stock No.for 400	Qty	Remarks
1	Quick socket	740002-00026	1	
2	Control socket	740003-00011	1	
3	Quick socket	740002-00026	1	
4	Breathing copper mouth	766001-00095	1	
5	Output socket mounting plate	766003-02398	1	
6	Plastic front panel	262005-01040	1	
7	Front panel	262005-01039	1	
8	Potentiometer knob	720031-00137	2	
9	control panel	262035-00318	1	
10	display board	220503-00047	1	
11	Left side panel	262017-00601	1	
12	Isolation transformer	763003-00023	1	
13	Resonant capacitor	722001-00073	1	
14	Main transformer	220629-00023	1	
15	Resonant inductance	220521-00007	1	
16	Current transformer	220149-00016	1	
17	Mid-layer board	263071-00421	1	
18	Main control board	210580-00492	1	
19	Driver board	210310-00108	1	
20	Power Transformers	763001-00326	1	380V
		763001-00035	1	400V CE
		763001-00295	1	415V
21	Power transformer bracket	766003-00019	1	
22	Top cover	262029-00433	1	
23	handle	766003-02388	2	
24	Circuit breaker pressure plate	766003-00188	1	
25	Circuit breaker	745011-00021	1	
26	Fan	746001-00013	1	380V
		746001-00087	1	400V(Fan 220V)
		746001-00101	1	415V

27	electromagnetic valve	752001-00014	1	
28	Back panel	262011-00738	1	
29	Fuse holder	740007-00004	1	
30	Circuit breaker cover	766003-02217	1	
31	Cable	769001-00288	1	380/415V
		769001-00026	1	400V
32	Control socket	740001-00184	1	
33	Control socket	740003-00012	1	
34	Fan cover	766003-02403	1	
35	Right side panel	262023-00585	1	
36	Bottom plate	262065-00067	1	
37	Filter capacitor	722001-00070	2	
38	Input capacitor bracket	766002-00104	1	
39	Rack Capacitor Board	220293-00009	1	
40	High frequency box assembly	220263-00001	1	
41	High leakage transformer	763003-00018	1	
42	Arc ignition plate assembly	220575-00003	1	
43	Step-up transformer components	220431-00060	1	
44	Output reactor	763004-00041	1	
45	current sensor	753001-00064	1	
46	Polypropylene capacitor	722001-00067	1	
47	IGBT protection board	220005-00164	1	
48	Varistor	720021-00017	1	380/400V
		720021-00021	1	415V
49	Three-phase rectifier module	735005-00002	1	
50	IGBT module	735007-00048	2	
51	Temperature relay	745008-00006	1	
52	IGBT radiator	264005-00028	1	
53	Radiator bracket	766002-00091	1	
54	Output diode Radiator	264011-00121	1	
55	Fast recovery diode module	735006-00029	2~3	

56	Diode protection board	220455-00002	2~3	
57	Exchange current inductance	220281-00008	1	
58	Positive connection plate	766003-00399	1	
59	Radiator connecting plate	775004-00033	1	
60	Radiator support	766002-01112	1	

Table.4-10-1: spare parts

5-REMOTE CONTROLLER

5-1 Analog remote controller

The analog remote controller can only adjust the welding current, suitable for POWER TIG 400 DC PULSE welding machine.

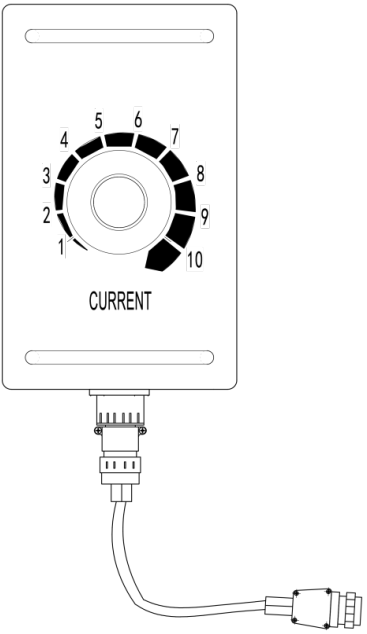

Fig.5-2-1-1:Analog remote controller

5-2 Digital remote controller

Digital remote controller, can adjust various parameters of the welding machine panel, suitable for POWER TIG 400 DC PULSE welding machine.

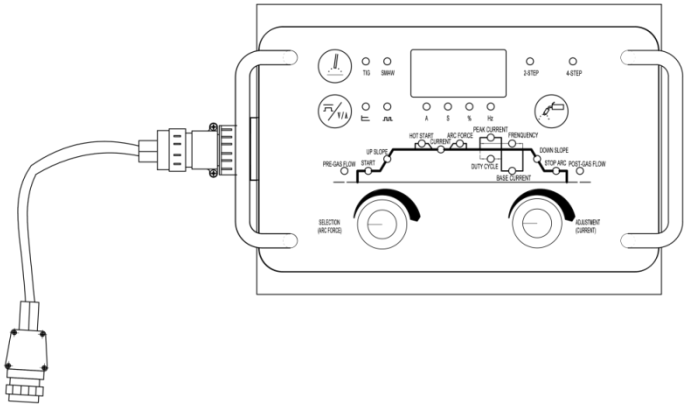

Fig.5-2-1-1: Digital remote controller

5-2-1 Control panel

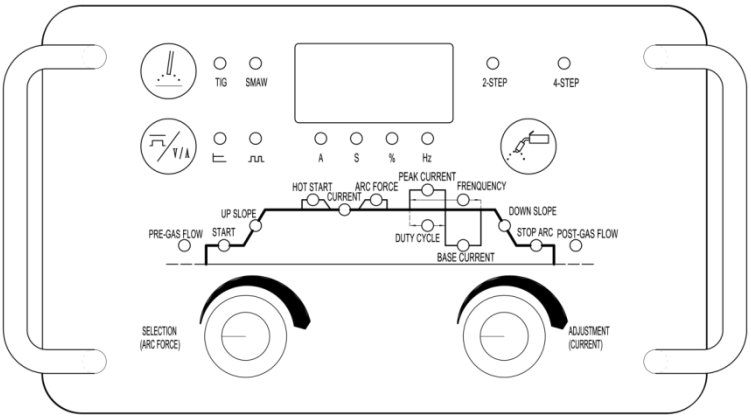

Fig.5-2-2-1: control panel

Please refer to chapter 4-3 of the control panel of the welding machine.

5-2-2 Interface

Connect to welding machine.

Pin No.	Pin No.	Description
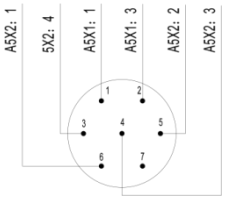	1	38VAC
	2	38VAC
	3	Y
	4	Z
	5	A
	6	B
	7	Null

Table 5-2-2-1 Description of control socket

5-2-3 Spare parts

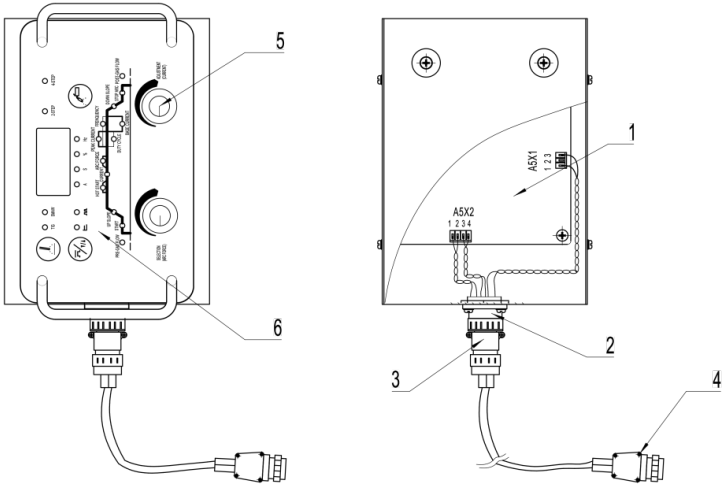

Fig.5-2-3-1:Spare parts

No.	Item	Stock No.	Qty
1	Display board	220503-00075	1
2	Control socket	740001-00034	1
3	Control plug(7pin)	740001-00002	1
4	Control plug(6pin)	740003-00004	1
5	knob	720031-00066	1
6	PC sticker	771001-00658	1

Table.5-2-3-1 Description of control socket

6-TROUBLE SHOOTING

Warning! An electric shock can be fatal. Before opening the machine:
-Switch it off and unplug it from the mains
-Unplug machine from the mains
-Put up a clearly legible and easy-to-understand warning sign to stop anybody inadvertently switching it back on again
-Check to make sure the electrically charged components (e.g. capacitors) have been discharged.
-Bolt in outer case also works for ground connection. Never use other bolt, which can not work for ground connection.

Machine problem, cause and remedy

Note! The following troubles and causes are uncertain. However, during the process of ATIG-P series and the normal using conditions, these might happen.

No.	FAULT	CAUSE	REMEDY
01	Indicator light does not light on and welding machine doesn't work when machine switches on	Default phase	Check power source
		Fuse (2A) is broken	Check whether the fan, power transformer and control board are in good condition
		Wire disconnection	Check and repair
02	Circuit breaker trips automatically except working for a long time in high welding current	IGBT module, three phase rectifier, or output diode module is damaged	Check and replace
		Short circuit	Check and replace
03	Welding current is not stable	Default phase	Check power supply
		Main control board is damaged	Check and replace main control board
04	The welding current is not adjustable	Inner line is broken	Check and replace
		Main control board is damaged	

Table 6-1: Trouble shooting

● **Error code display**

This series of machines have automatic protection and error code display function. Relevant Cause & Remedy can be found according to below Error codes, as shown in Table 6-2.

Code	Trouble	Cause	Remedy
E10	Torch trigger fault	No current output after pressing torch trigger for 2s	Release torch trigger
E19	Over-heat protection	The welding machine is over heat; Temperature Relay fault Main control board damaged	Shut down the welding machine and wait for cooling; or replace Temperature Relay
E0A	Water-cooling is abnormal	No circulating water in water cooling system Water flow sensor damaged	Check and repair

Table 6-2: Displayed error code

7-CARE AND MAINTENANCE

Before open the machine

Warning! An electric shock can be fatal. Before opening the machine:

Switch it off and unplug it from the mains

Put up a clearly legible and easy-to-understand warning sign to stop anybody inadvertently switching it back on again

Check to make sure the electrically charged components (e.g. capacitors) have been discharged

Bolts in outer case also work for ground connection. Never use other bolt that can not work for ground connection

Maintenance of welding power source

Please follow the instructions as below to ensure normal use of power source

Conduct safety check at regular intervals (see “Safety rules”)

Dismantle machine side panels and clean machine inside with clean and low-pressure compressed air by professional technician, not less than twice per year.

Clean the components at a certain distance only

If a lot of dust has accumulated, clean the cooling-air ducts

Maintenance of water-cooled welding torch

For water cooled welding torch:

Check the connections of water cooling system

Check the coolant level, cleanliness of coolant etc. (clean coolant only)

Frequently check coolant's back flow state

Daily maintenance

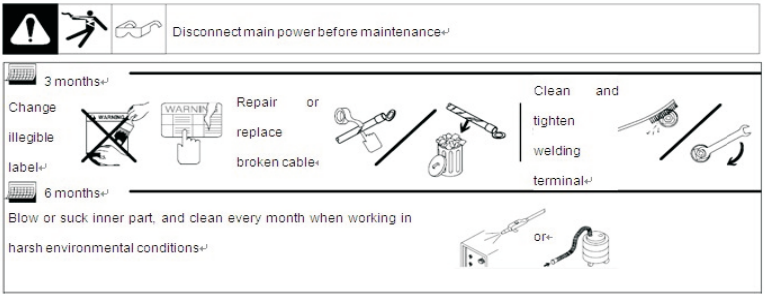

Fig.7-1: Daily maintenance

PoWer TIG Series

GeKaMac®

Gedik Welding Inc.
Ankara Caddesi No: 306 Şeyhli 34906 Pendik - İstanbul / Turkey
P. +90 216 378 50 00 • **F.** +90 216 378 20 44
www.gedikwelding.com